STEVES AND SONS
203 Humble Ave.
San Antonio, TX 78225

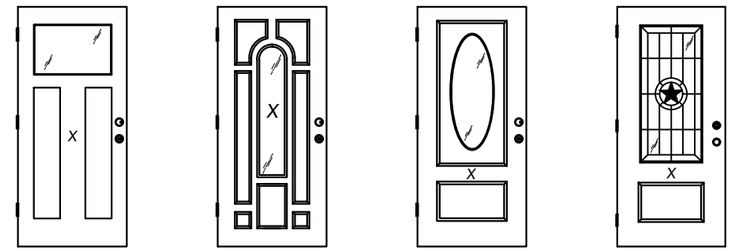

1/4 TOP LITE | CENTER LITE | 3/4 OVAL | 3/4 LITE

DIRECT GLAZED FIBERGLASS DOOR DOUBLE

INSWING/OUTSWING "NON-IMPACT"

REGENCY DECORATIVE COLLECTION

LICENSE No. 43409 STATE OF FLORIDA PROFESSIONAL ENGINEER L. F. SCHMIDT

Digitally signed by Lyndon F Schmidt
Date: 2026.07.07 15:37:26 -04'00'

This item has been digitally signed and sealed by **L. F. Schmidt, P.E.** on the date adjacent to the seal.

Printed copies of this document are not considered signed and sealed and the signature must be verified on any electronic copies.

THIS PRODUCT APPROVAL IS VALID ONLY FOR THE STATE OF FLORIDA

GENERAL NOTES

1. This product has been evaluated and is in compliance with the 9th Edition (2026) Florida Building Code (FBC) structural requirements excluding the "High Velocity Hurricane Zone" (HVHZ).
2. Product anchors shall be as listed and spaced as shown on details. Anchor embedment to base material shall be beyond wall dressing or stucco.
3. When used in areas requiring wind borne debris protection this product is required to be protected with an impact resistant covering that complies with FBC Sections 1609.1.2 & R301.2.1.2 of the FBC.
4. For 2x stud framing construction, anchoring of these units shall be the same as that shown for 2x buck masonry construction.
5. Site conditions that deviate from the details of this drawing require further engineering analysis by a licensed engineer or registered architect.

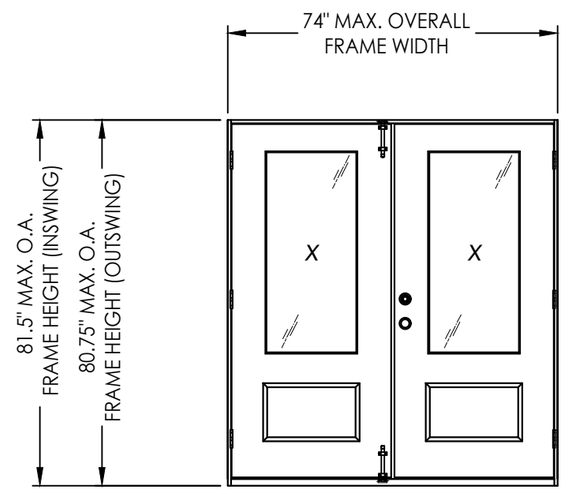

CONFIGURATION	MAX. FRAME DIMENSION	SURFACE BOLTS REQURIED	DESIGN PRESSURE (PSF) INSWING		DESIGN PRESSURE (PSF) OUTSWING	
			POSITIVE	NEGATIVE	POSITIVE	NEGATIVE
XX	74.0" x 81.5"	NO	+20.0	-25.0	+20.0	-25.0
		YES	+40.0	-45.0	+40.0	-45.0

TABLE OF CONTENTS

SHEET #	DESCRIPTION	SHEET #	
1	Typical Elevations, Design Pressures & General Notes	6	Horizontal & Vertical Cross Sections (1X Buck)
2	Door Panel Details	7	Horizontal & Vertical Cross Sections (Direct to Masonry)
3	Door Panel Options	8	Vertical Cross Sections
4	Elevations	9	Buck & Frame Anchoring & Hardware Details
5	Horizontal & Vertical Cross Sections (2X Buck)	10	Bill of Materials & Components

Documents Prepared By:
Lyndon F. Schmidt
P.E. No. 43409
RW BUILDING CONSULTANTS, INC.
P.O. Box 230, Valrico, FL 33595
Phone No.: 813.659.9197
FBPE Registry No. 9813

PRODUCT: STEVES & SONS FIBERGLASS DOOR

PART OR ASSEMBLY: TYPICAL ELEVATION, DESIGN PRESSURES & GENERAL NOTES

REVISIONS

NO.	DATE		BY
2	7/02/26	UPDATE TO 9TH ED. (2026) FBC	LFS
1	8/02/23	UPDATE TO 8TH ED. (2023) FBC	LFS

DATE: 3/10/22
SCALE: N.T.S.
DWG. BY: RW
CHK. BY: LFS
DRAWING NO.: FL-41467.2
SHEET 1 OF 10

© 2022 R.W. Building Consultants Inc.

Z:\2023 FBC Drawings\Steves & Sons\FL-41467 R1\FL-41467.2.dwg

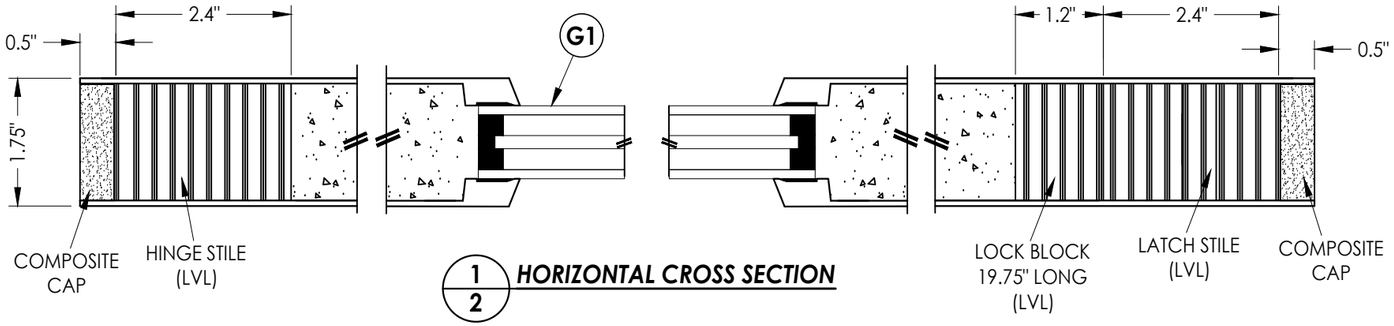

1/2 **HORIZONTAL CROSS SECTION**

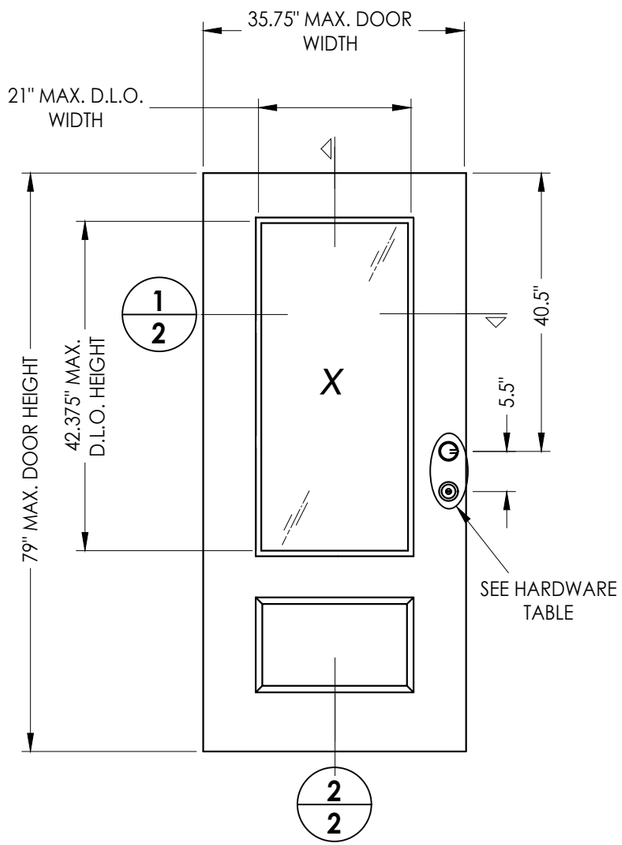

40 **FIBERGLASS DOOR PANEL**

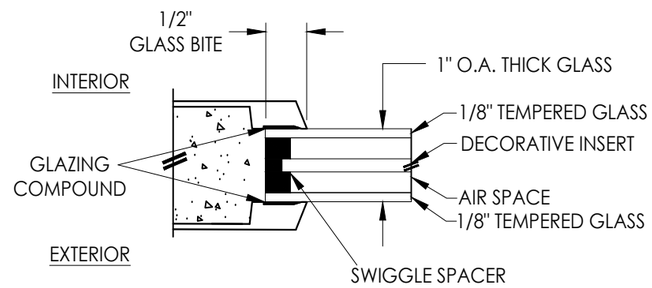

G1 **GLAZING DETAIL**

HARDWARE TABLE		
MANUFACTURER	MODEL	
KWIKSET	LATCH: DEADBOLT:	SIGNATURE SERIES SIGNATURE SERIES (980)
SCHLAGE	LATCH: DEADBOLT:	F51 B60N
ROCKWELL	LATCH: DEADBOLT:	PREMIUM HANDLESET PREMIUM DEADBOLT

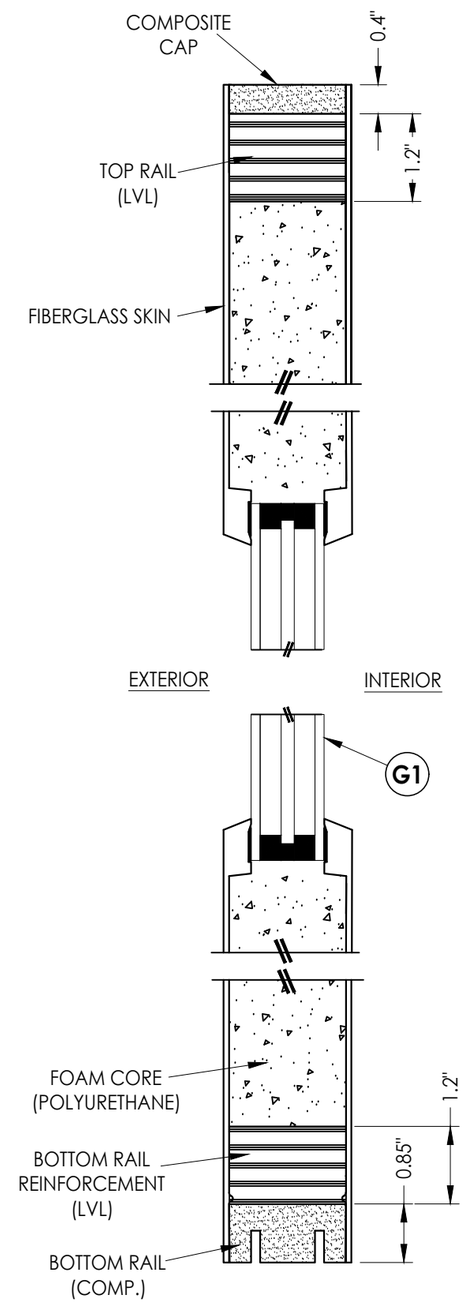

2/2 **VERTICAL CROSS SECTION**

FIBERGLASS DOOR SKIN: MIN. 0.08" THK.
CORE MATERIAL: POLYURETHANE FOAM

Documents Prepared By:
Lyndon F. Schmidt
P.E. No. 43409
RW BUILDING CONSULTANTS, INC.
P.O. Box 230, Valrico, FL 33595
Phone No.: 813.659.9197
FBPE Registry No. 9813

PRODUCT: STEVES & SONS FIBERGLASS DOOR

PART OR ASSEMBLY: DOOR PANEL DETAILS

NO.	DATE		BY
2	7/02/26	UPDATE TO 9TH ED. (2026) FBC	LFS
1	8/02/23	UPDATE TO 8TH ED. (2023) FBC	LFS

REVISIONS

DATE: 3/10/22
SCALE: N.T.S.
DWG. BY: RW
CHK. BY: LFS
DRAWING NO.: FL-41467.2
SHEET 2 OF 10

© 2022 R.W. BUILDING CONSULTANTS INC.

Z:\2023 FBC Drawings\Steves & Sons\FL-41467 R1\FL-41467.2.dwg

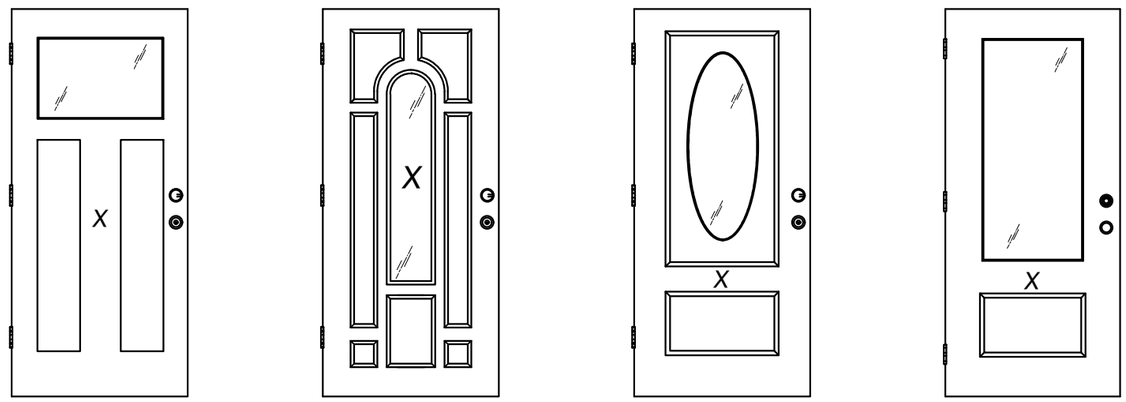

1/4 TOP LITE | CENTER LITE | 3/4 OVAL | 3/4 LITE

REGENCY DECORATIVE COLLECTION

Documents Prepared By:
Lyndon F. Schmidt
P.E. No. 43409
RW BUILDING CONSULTANTS, INC.
P.O. Box 230, Valrico, FL 33595
Phone No.: 813.659.9197
FBPE Registry No. 9813

PRODUCT: *STEVES & SONS FIBERGLASS DOOR*

PART OR ASSEMBLY: *DOOR PANEL OPTIONS*

REVISIONS

NO.	DATE		BY
2	7/02/26	UPDATE TO 9TH ED. (2026) FBC	LFS
1	8/02/23	UPDATE TO 8TH ED. (2023) FBC	LFS

DATE: 3/10/22
SCALE: N.T.S.
DWG. BY: RW
CHK. BY: LFS
DRAWING NO.: FL-41467.2
SHEET 3 OF 10

© 2022 R.W. Building Consultants Inc.

Z:\2023 FBC Drawings\Steves & Sons\FL-41467 R1\FL-41467.2.dwg

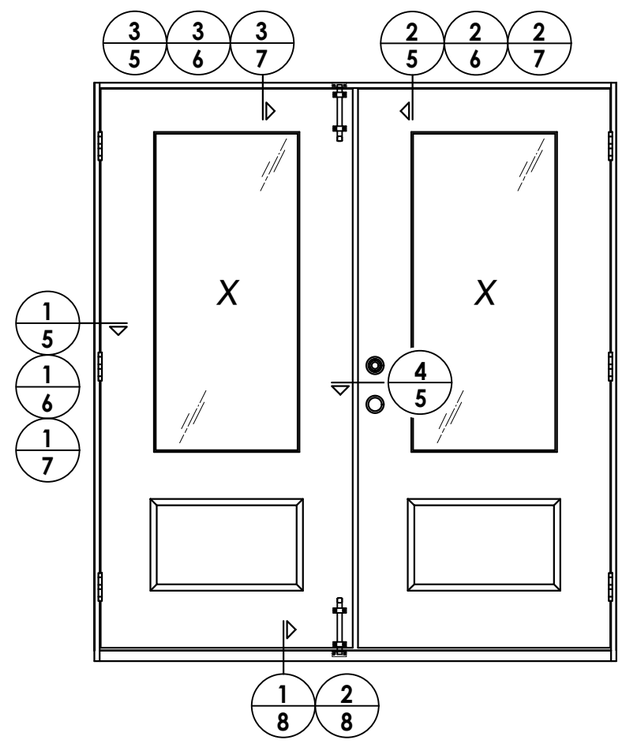

ELEVATION
XX

Documents Prepared By:
Lyndon F. Schmidt
P.E. No. 43409
RW BUILDING CONSULTANTS, INC.
P.O. Box 230, Valrico, FL 33595
Phone No.: 813.659.9197
FBPE Registry No. 9813

PRODUCT:
STEVES & SONS
FIBERGLASS DOOR

PART OR ASSEMBLY:
ELEVATIONS

NO.	DATE	REVISIONS	BY
2	7/02/26	UPDATE TO 9TH ED. (2026) FBC	LFS
1	8/02/23	UPDATE TO 8TH ED. (2023) FBC	LFS

DATE: 3/10/22
SCALE: N.T.S.
DWG. BY: RW
CHK. BY: LFS
DRAWING NO.: FL-41467.2
SHEET 4 OF 10

© 2022 R.W. Building Consultants Inc.

Z:\2023 FBC Drawings\Steves & Sons\FL-41467 R1\FL-41467.2.dwg

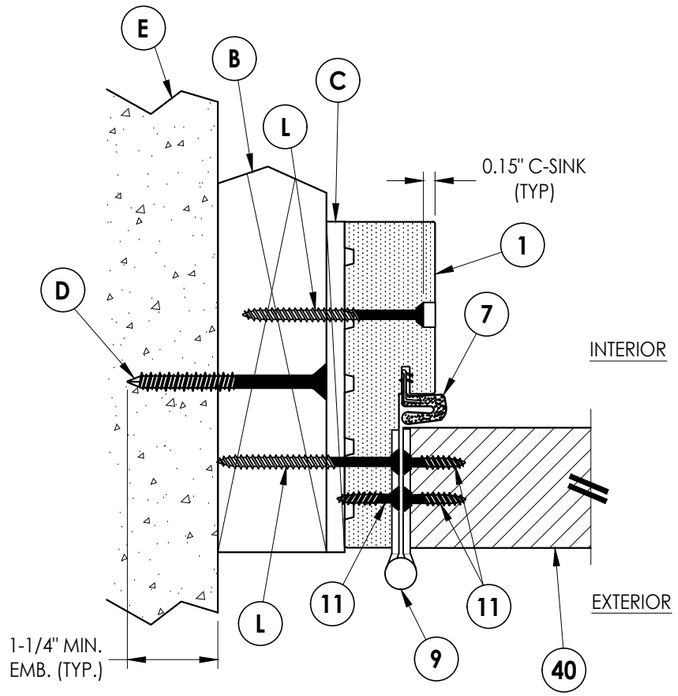

1/5 HORIZONTAL CROSS SECTION
Shown w/ 2X Buck
Outswing shown (Inswing similar)

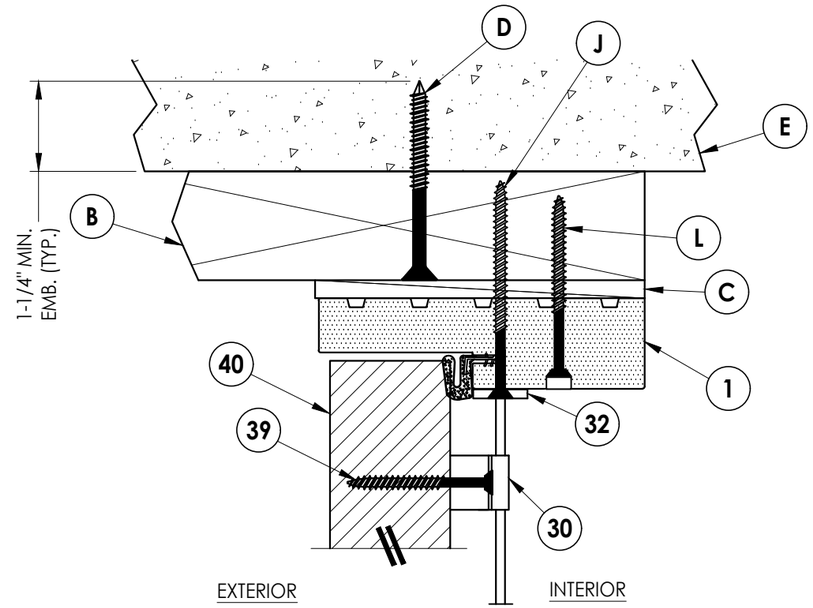

2/5 VERTICAL CROSS SECTION
Shown w/ 2X Buck
Outswing shown

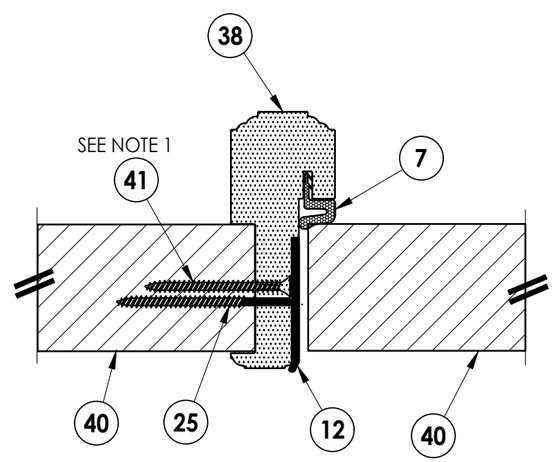

4/5 HORIZONTAL CROSS SECTION
Outswing shown (Inswing similar)

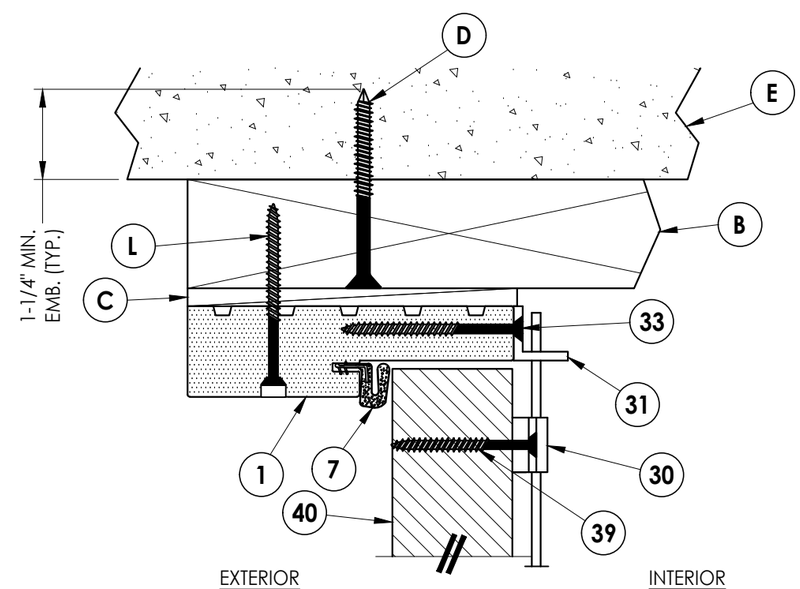

3/5 VERTICAL CROSS SECTION
Shown w/ 2X Buck
Inswing shown

Note:
1. Screws located 8" from each end of astragal plus four (3) more located @ 23", 37" & 48" down from the top of the astragal (5 screws total - countersink 3/16").

Documents Prepared By:
Lyndon F. Schmidt
P.E. No. 43409
BUILDING CONSULTANTS, INC.
P.O. Box 230, Valrico, FL 33595
Phone No.: 813.659.9197
FBPE Registry No. 9813

PRODUCT: STEVES & SONS FIBERGLASS DOOR

PART OR ASSEMBLY: HORIZONTAL & VERTICAL CROSS SECTIONS (2X BUCK)

REVISIONS

NO.	DATE		BY
2	7/02/26	UPDATE TO 9TH ED. (2026) FBC	LFS
1	8/02/23	UPDATE TO 8TH ED. (2023) FBC	LFS

DATE: 3/10/22
SCALE: N.T.S.
DWG. BY: RW
CHK. BY: LFS
DRAWING NO.: FL-41467.2
SHEET 5 OF 10

© 2022 R.W. BUILDING CONSULTANTS INC.

Z:\2023 FBC Drawings\Steves & Sons\FL-41467 R1\FL-41467.2.dwg

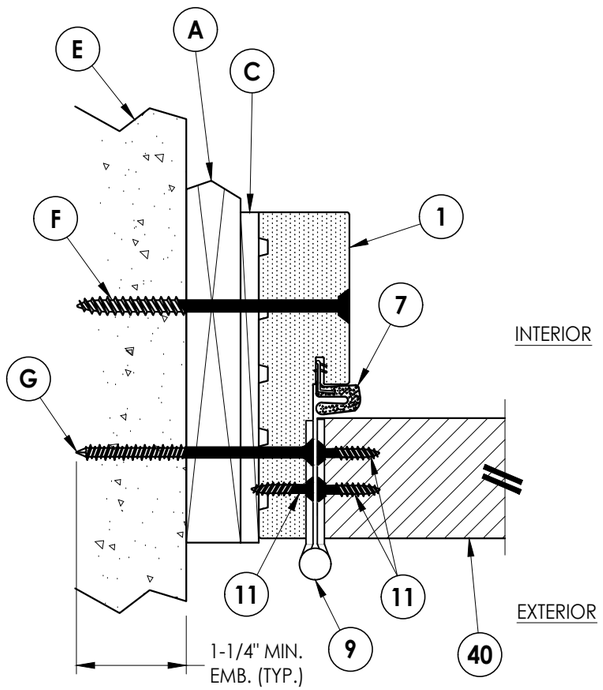

1/6 HORIZONTAL CROSS SECTION
Shown w/ 1X Buck
Outswing shown (Inswing similar)

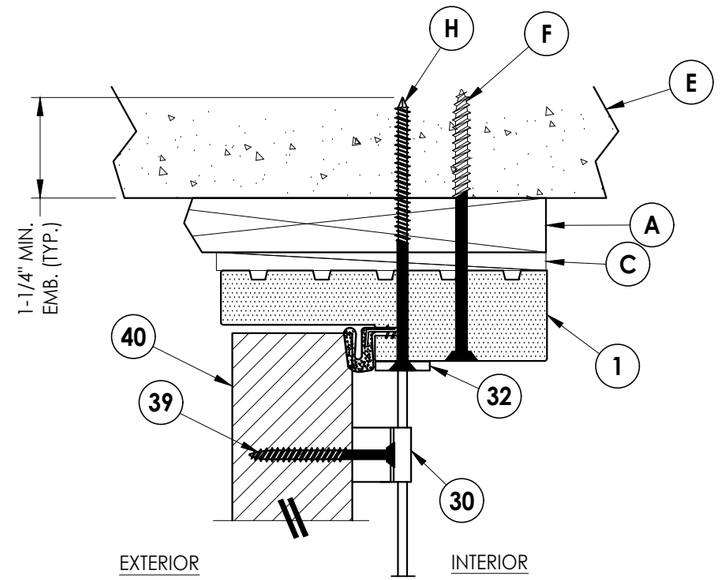

2/6 VERTICAL CROSS SECTION
Shown w/ 1X Buck
Outswing shown

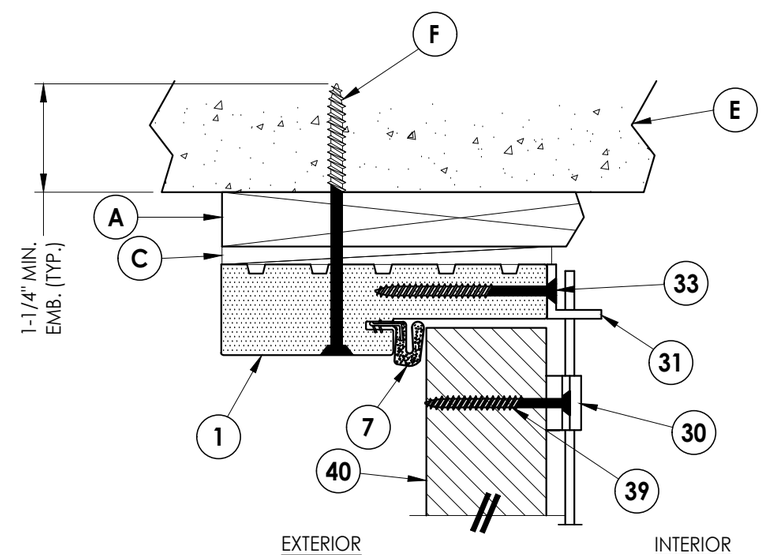

3/6 VERTICAL CROSS SECTION
Shown w/ 1X Buck
Inswing shown

Documents Prepared By:
Lyndon F. Schmidt
P.E. No. 43409
RW BUILDING CONSULTANTS, INC.
P.O. Box 230, Valrico, FL 33595
Phone No.: 813.659.9197
FBPE Registry No. 9813

PRODUCT: STEVES & SONS FIBERGLASS DOOR

PART OR ASSEMBLY: HORIZONTAL & VERTICAL CROSS SECTIONS (1X BUCK)

REVISIONS

NO.	DATE		BY
2	7/02/26	UPDATE TO 9TH ED. (2026) FBC	LFS
1	8/02/23	UPDATE TO 8TH ED. (2023) FBC	LFS

DATE: 3/10/22
SCALE: N.T.S.
DWG. BY: RW
CHK. BY: LFS
DRAWING NO.: FL-41467.2
SHEET 6 OF 10

© 2022 R.W. BUILDING CONSULTANTS INC.

Z:\2023 FBC Drawings\Steves & Sons\FL-41467 R1\FL-41467.2.dwg

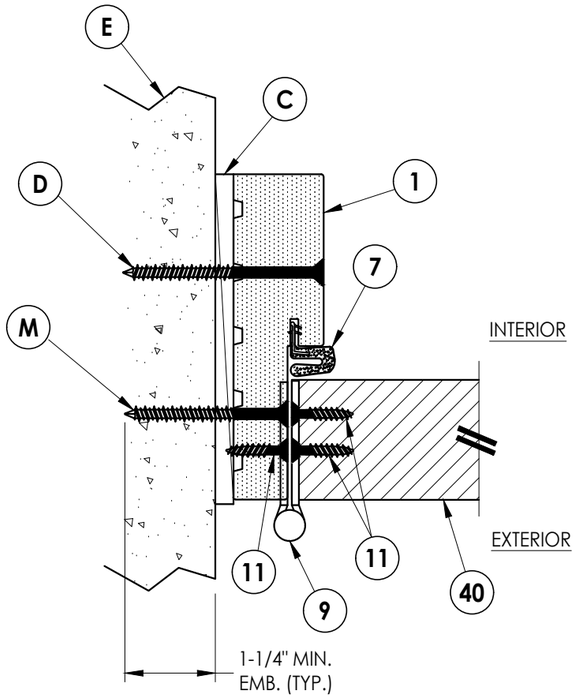

1/7 HORIZONTAL CROSS SECTION
Shown Direct to Masonry
Outswing shown (Inswing similar)

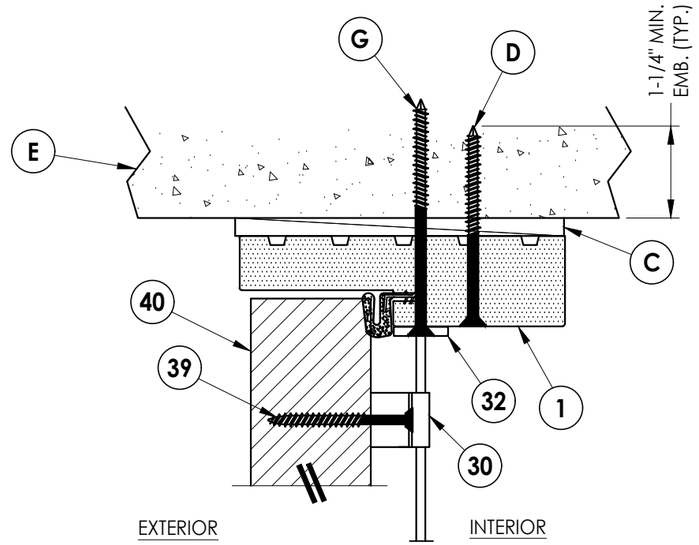

2/7 VERTICAL CROSS SECTION
Shown Direct to Masonry
Outswing shown

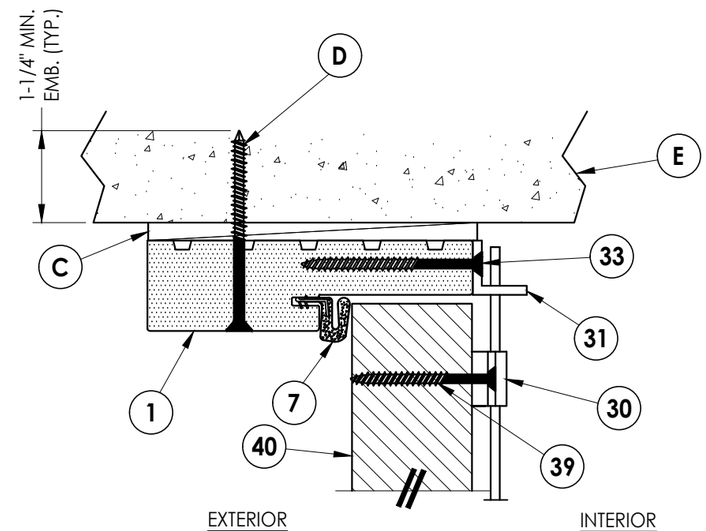

3/7 VERTICAL CROSS SECTION
Shown Direct to Masonry
Inswing shown

Documents Prepared By:
Lyndon F. Schmidt
P.E. No. 43409

RW BUILDING CONSULTANTS, INC.
P.O. Box 230, Valrico, FL 33595
Phone No.: 813.659.9197
FBPE Registry No. 9813

PRODUCT: STEVES & SONS FIBERGLASS DOOR

PART OR ASSEMBLY: HORIZONTAL & VERTICAL CROSS SECTIONS (DIRECT TO MASONRY)

REVISIONS

NO.	DATE		BY
2	7/02/26	UPDATE TO 9TH ED. (2026) FBC	LFS
1	8/02/23	UPDATE TO 8TH ED. (2023) FBC	LFS

DATE: 3/10/22
SCALE: N.T.S.
DWG. BY: RW
CHK. BY: LFS
DRAWING NO.: FL-41467.2
SHEET 7 OF 10

© 2022 R.W. Building Consultants Inc.

Z:\2023 FBC Drawings\Steves & Sons\FL-41467 R1\FL-41467.2.dwg

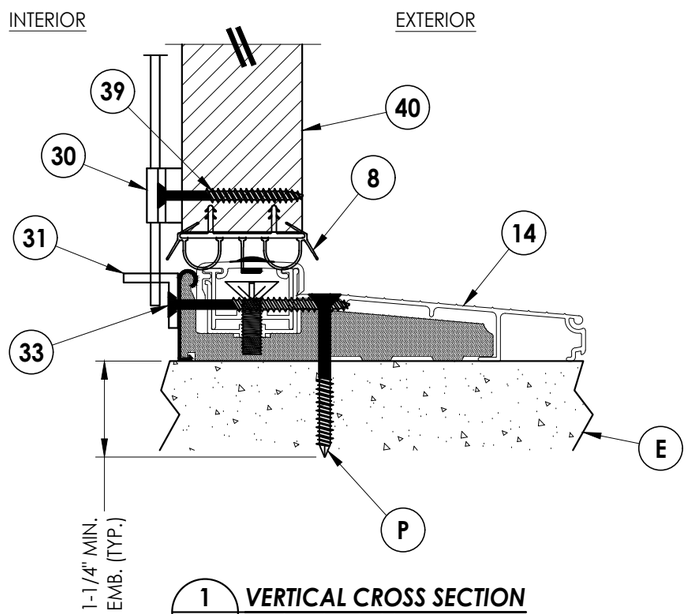

1/8 **VERTICAL CROSS SECTION**
Inswing Threshold

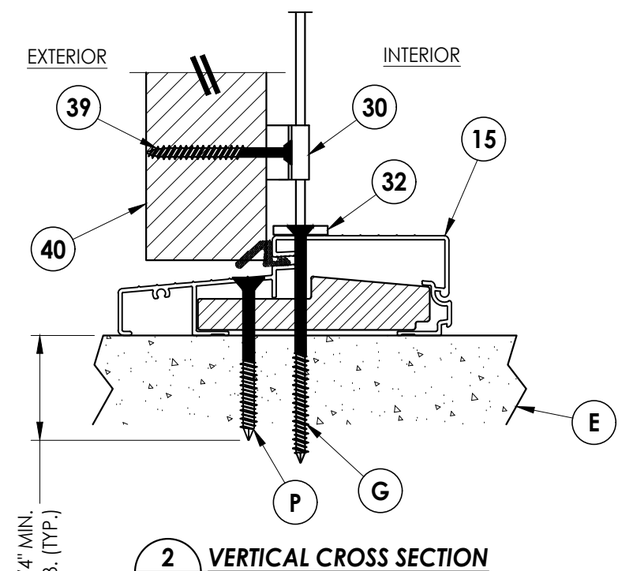

2/8 **VERTICAL CROSS SECTION**
Outswing Threshold

Documents Prepared By:
Lyndon F. Schmidt
P.E. No. 43409
RW BUILDING CONSULTANTS, INC.
P.O. Box 230, Valrico, FL 33595
Phone No.: 813.659.9197
FBPE Registry No. 9813

PRODUCT: STEVES & SONS FIBERGLASS DOOR

PART OR ASSEMBLY: VERTICAL CROSS SECTIONS

REVISIONS

NO.	DATE		BY
2	7/02/26	UPDATE TO 9TH ED. (2026) FBC	LFS
1	8/02/23	UPDATE TO 8TH ED. (2023) FBC	LFS

DATE: 3/10/22
SCALE: N.T.S.
DWG. BY: RW
CHK. BY: LFS
DRAWING NO.: FL-41467.2
SHEET 8 OF 10

© 2022 R.W. Building Consultants Inc.

Z:\2023 FBC Drawings\Steves & Sons\FL-41467 R1\FL-41467.2.dwg

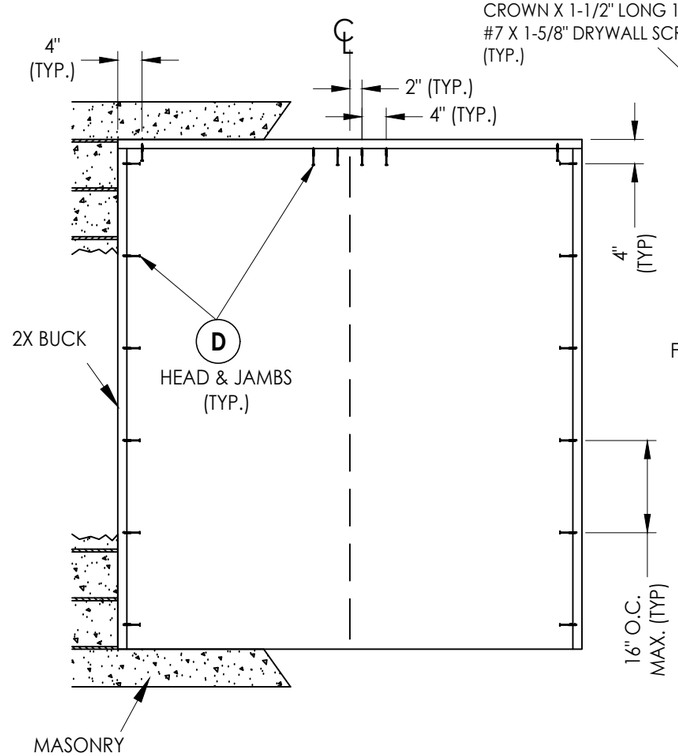

2X BUCK ANCHORING

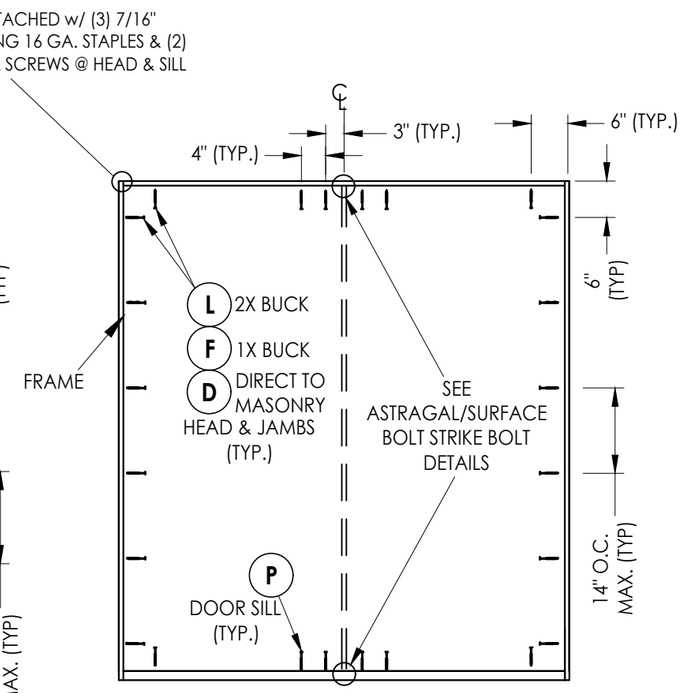

FRAME ANCHORING

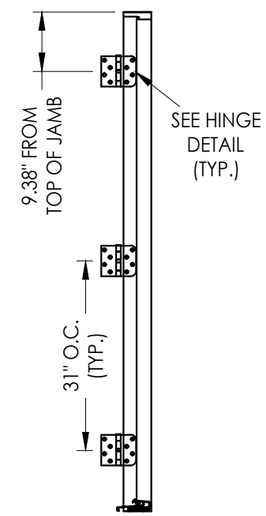

HINGE JAMB

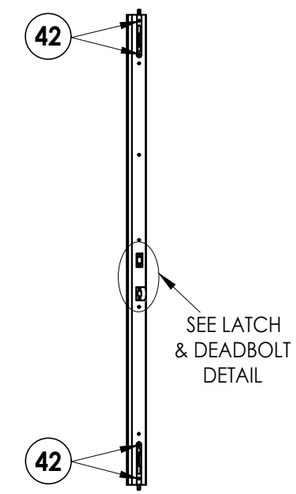

COMPOSITE ASTRAGAL

7" STEEL FLIP LOCK FLUSHBOLT (5/16" Ø) @ EACH END OF ASTRAGAL

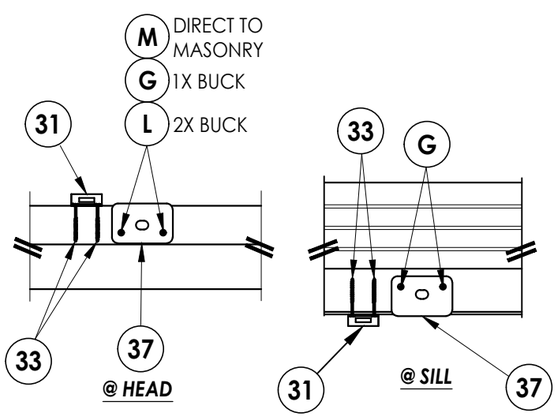

ASTRAGAL/SURFACE BOLT STRIKE PLATE DETAILS

INSWING

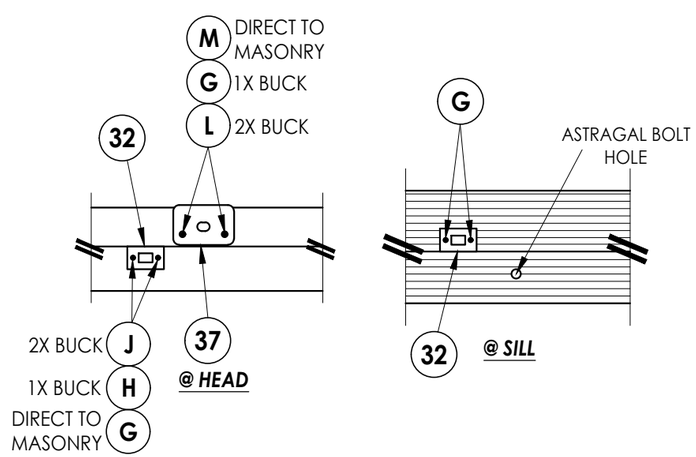

ASTRAGAL/SURFACE BOLT STRIKE PLATE DETAILS

OUTSWING

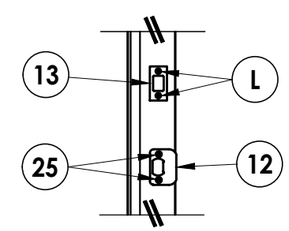

LATCH & DEADBOLT DETAIL

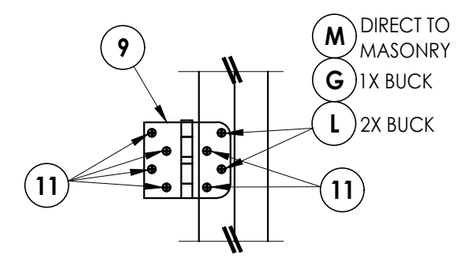

HINGE DETAIL

INSWING

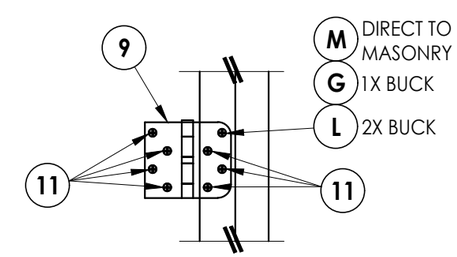

HINGE DETAIL

OUTSWING

HARDWARE DETAILS

Documents Prepared By:
Lyndon F. Schmidt
P.E. No. 43409
RW BUILDING CONSULTANTS, INC.
P.O. Box 230, Valrico, FL 33595
Phone No.: 813.659.9197
FBPE Registry No. 9813

PRODUCT: STEVES & SONS FIBERGLASS DOOR

PART OR ASSEMBLY: BUCK & FRAME ANCHORING & HARDWARE DETAILS

NO.	DATE	REVISIONS	BY
2	7/02/26	UPDATE TO 9TH ED. (2026) FBC	LFS
1	8/02/23	UPDATE TO 8TH ED. (2023) FBC	LFS

DATE: 3/10/22
SCALE: N.T.S.
DWG. BY: RW
CHK. BY: LFS
DRAWING NO.: FL-41467.2
SHEET 9 OF 10

© 2022 R.W. Building Consultants Inc.

Z:\2023 FBC Drawings\Steves & Sons\FL-41467 R1\FL-41467.2.dwg

BILL OF MATERIALS

ITEM #	DESCRIPTION	MATERIAL
A	1X BUCK (G >= 0.42)	WOOD
B	2X BUCK (G >= 0.42)	WOOD
C	1/4" MAX. SHIM SPACE	-
D	1/4" X 2-3/4" PFH DeWALT OR ITW CONCRETE SCREW	STEEL
E	MASONRY - 3,000 PSI MIN. CONCRETE CONFORMING TO ACI 301 OR HOLLOW BLOCK CONFORMING TO ASTM C90	CONCRETE
F	1/4" X 3-3/4" PFH DeWALT OR ITW CONCRETE SCREW	STEEL
G	3/16" X 3-1/4" PFH ITW CONCRETE SCREW	STEEL
H	3/16" X 3-3/4" PFH ITW CONCRETE SCREW	STEEL
J	#10 X 3" PFH WOOD SCREW	STEEL
L	#10 X 2-1/2" PFH WOOD SCREW (1.15" MIN. EMB.)	STEEL
M	3/16" X 2-1/4" PFH ITW CONCRETE SCREW	STEEL
P	1/4" X 2-1/4" PFH DeWALT OR ITW CONCRETE SCREW	STEEL
1	COMPOSITE JAMB	COMP
7	WEATHERSTRIP	FOAM
8	SWEEP	VINYL
9	4" X 4" HINGE	STEEL
11	#9 X 3/4" PFH WOOD SCREW	STEEL
12	LATCH STRIKE PLATE	STEEL
13	DEADBOLT STRIKE PLATE	STEEL
14	INSWING THRESHOLD	ALUM/COMP
15	OUTSWING THRESHOLD	ALUM/COMP
25	#8 X 2-1/2" PFH WOOD SCREW	STEEL
27	#10 X 2" PFH SMS	STEEL
29	#10 X 3" FH COMPOSITE DECK SCREW	STEEL
30	8" SURFACE BOLT (HAGER 275D)	STEEL
31	SURFACE BOLT GUIDE PLATE	STEEL
32	SURFACE BOLT STRIKE PLATE	STEEL
33	#10 X 2-1/2" PFH WOOD SCREW	STEEL
37	ASTRAGAL STRIKE PLATE	STEEL
38	ASTRAGAL (COMPOSITE)	COMP
39	#10 X 2" FH SMS	STEEL
40	DOOR PANEL	-
41	#7 X 1-5/8" DRYWALL SCREWS	STEEL
42	#8 X 2-1/2" FH SMS	STEEL

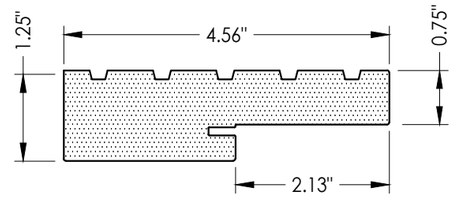

1 **COMPOSITE JAMB**
WORLDWIDE "4EVER"

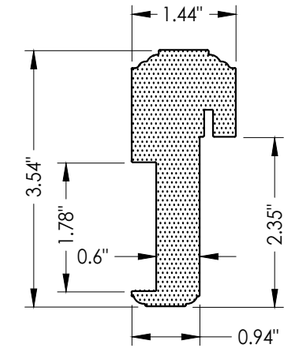

38 **COMPOSITE ASTRAGAL**

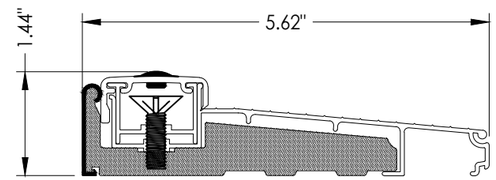

14 **INSWING THRESHOLD**
Columbia

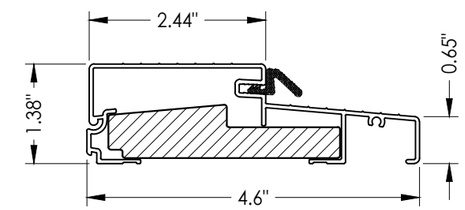

15 **OUTSWING THRESHOLD**
Columbia

CONCRETE ANCHOR NOTES:

1. *Concrete anchor locations at the corners may be adjusted to maintain the min. edge distance to mortar joints.*
2. *Concrete anchor locations noted as "MAX. ON CENTER" must be adjusted to maintain the min. edge distance to mortar joints, additional concrete anchors may be required to ensure the "MAX. ON CENTER" dimension are not exceeded.*
3. *Concrete anchor table:*

ANCHOR TYPE	ANCHOR SIZE	MIN. EMBEDMENT	MIN. CLEARANCE TO MASONRY EDGE	MIN. CLEARANCE TO ADJACENT ANCHOR
ITW BUILDEX TAPCON®	3/16"	1-1/4"	3"	1-1/2"
	1/4"	1-1/4"	2"	4"
DeWALT ULTRACON+®	1/4"	1-1/4"	1"	4"

WOOD SCREW INSTALLATION NOTES:

1. *Maintain a minimum 5/8" edge distance, 1" end distance, & 1" o.c. spacing of wood screws to prevent the splitting of wood.*

Documents Prepared By:
Lyndon F. Schmidt
P.E. No. 43409

RW BUILDING CONSULTANTS, INC.
P.O. Box 230, Valrico, FL 33595
Phone No.: 813.659.9197
FBPE Registry No. 9813

PRODUCT: STEVES & SONS FIBERGLASS DOOR

PART OR ASSEMBLY: BILL OF MATERIALS & COMPONENTS

NO.	DATE	BY	REVISIONS
2	7/02/26	LFS	UPDATE TO 9TH ED. (2026) FBC
1	8/02/23	LFS	UPDATE TO 8TH ED. (2023) FBC

DATE: 3/10/22
SCALE: N.T.S.
DWG. BY: RW
CHK. BY: LFS
DRAWING NO.: FL-41467.2
SHEET 10 OF 10

© 2022 R.W. BUILDING CONSULTANTS INC.

Z:\2023 FBC Drawings\Steves & Sons\FL-41467 R1\FL-41467.2.dwg